## Description

The AZB40A8 PWM servo drive is designed to drive brushless DC motors at a high switching frequency. To increase system reliability and to reduce cabling costs, the drive is designed for direct integration into your PCB. The AZB40A8 is fully protected against over-voltage, under-voltage, over-current, over-heating and short-circuits. A single digital output indicates operating status. The drive interfaces with digital controllers that have analog +/-10V output. This servo drive requires only a single unregulated isolated DC power supply, and is fully RoHS (Reduction of Hazardous Substances) compliant.

See Part Numbering Information on last page of datasheet for additional ordering options.

## Power Range

| | |
|---|---|
| Peak Current | 40 A |
| Continuous Current | 20 A |
| Supply Voltage | 10 - 80 VDC |

## Features

- High Power Density
- Compact Size
- Direct Board-to-Board Integration
- Lightweight
- High Switching Frequency
- Four Quadrant Regenerative Operation
- Wide Temperature Range
- High Performance Thermal Dissipation
- Differential Input Command
- Current Monitor Output
- Digital Fault Output Monitor
- 12VDC Operation

**HARDWARE PROTECTION**
- Over-Voltage
- Under-Voltage
- Over-Current
- Over-Temperature
- Short-circuit (phase-phase)
- Short-circuit (phase-ground)

**INPUTS/OUTPUTS**
- Digital Fault Output
- Digital Inhibit Input
- Analog Current Monitor
- Analog Command Input
- Analog Current Reference

**FEEDBACK SUPPORTED**
- Hall Sensors

**MODES OF OPERATION**
- Current

**COMMUTATION**
- Trapezoidal

**MOTORS SUPPORTED**
- Three Phase (Brushless)
- Single Phase (Brushed, Voice Coil, Inductive Load)

**COMMAND SOURCE**
- ±10 V Analog

**COMPLIANCES & AGENCY APPROVALS**
- RoHS

## BLOCK DIAGRAM

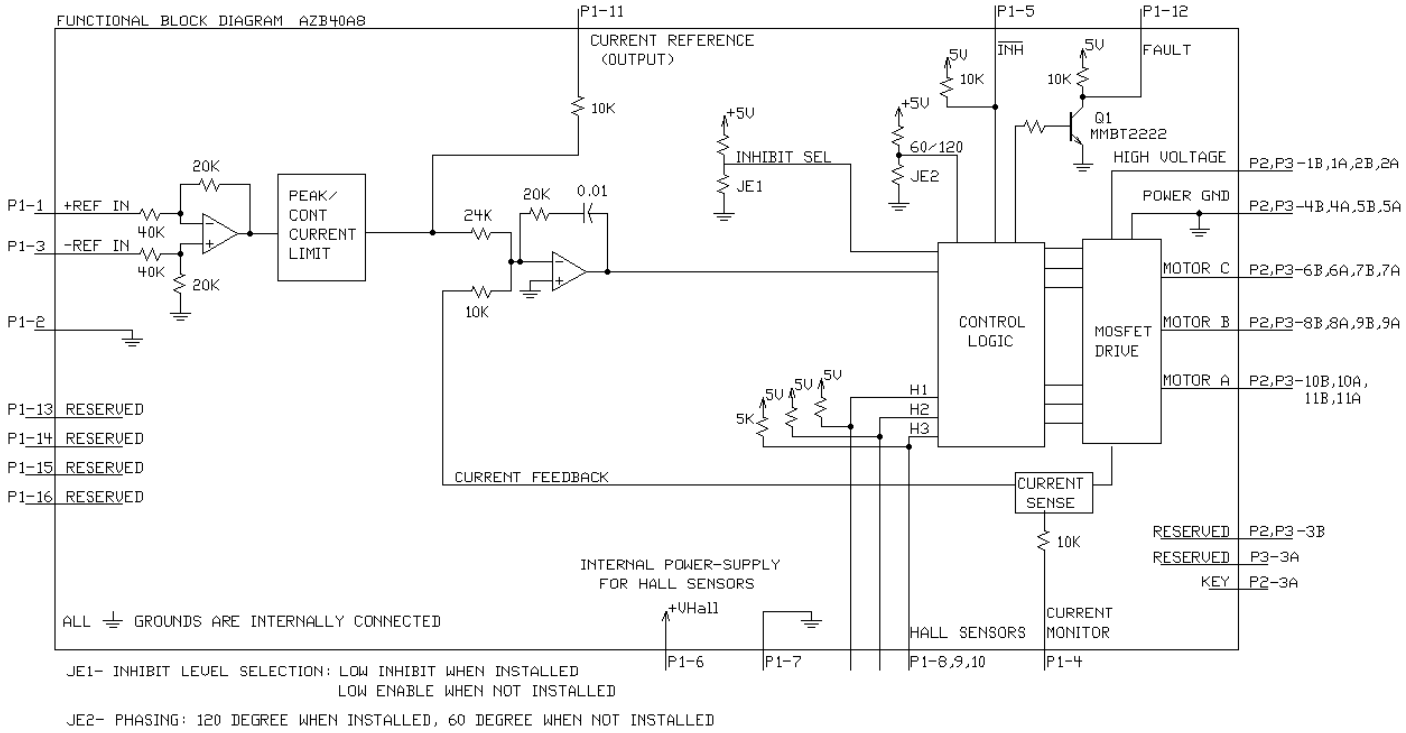


| Information on Approvals and Compliances | |
|---|---|
| RoHS COMPLIANCE | RoHS (Reduction of Hazardous Substances) is intended to prevent hazardous substances such as lead from being manufactured in electrical and electronic equipment. |

## SPECIFICATIONS

| Power Specifications | | |
|---|---|---|
| Description | Units | Value |
| DC Supply Voltage Range | VDC | 10 - 80 |
| DC Bus Under Voltage Limit | VDC | 9 |
| DC Bus Over Voltage Limit | VDC | 88 |
| Maximum Peak Output Current[1] | A | 40 |
| Maximum Continuous Output Current | A | 20 |
| Maximum Continuous Output Power | W | 1520 |
| Maximum Power Dissipation at Continuous Current | W | 80 |
| Minimum Load Inductance (Line-To-Line)[2] | µH | 100 |
| Low Voltage Supply Outputs | - | +6 VDC (30 mA) |
| Switching Frequency | kHz | 31 |
| **Control Specifications** | | |
| Description | Units | Value |
| Command Sources | - | ±10 V Analog |
| Feedback Supported | - | Halls |
| Commutation Methods | - | Trapezoidal |
| Modes of Operation | - | Current |
| Motors Supported | - | Three Phase (Brushless), Single Phase (Brushed, Voice Coil, Inductive Load) |
| Hardware Protection | - | Invalid Commutation Feedback, Over Current, Over Temperature, Over Voltage, Under Voltage, Short Circuit (Phase-Phase & Phase-Ground) |
| **Mechanical Specifications** | | |
| Description | Units | Value |
| Agency Approvals | - | RoHS |
| Size (H x W x D) | mm (in) | 76.2 x 50.8 x 22.86 (3 x 2 x 0.9) |
| Weight | g (oz) | 119.7 (4.2) |
| Heatsink (Base) Temperature Range[3] | °C (°F) | 0 - 75 (32 - 167) |
| Storage Temperature Range | °C (°F) | -40 - 85 (-40 - 185) |
| P1 Connector | - | 16-pin, 2.54 mm spaced header |
| P2 Connector | - | 22-pin, 2.54 mm spaced, dual-row header |
| P3 Connector | - | 22-pin, 2.54 mm spaced, dual-row header |

**Notes**

1. Maximum duration of peak current is ~2 seconds. Peak RMS value must not exceed continuous current rating of the drive.
2. Lower inductance is acceptable for bus voltages well below maximum. Use external inductance to meet requirements.
3. Additional cooling and/or heatsink may be required to achieve rated performance.

## PIN FUNCTIONS

| P1 - Signal Connector | | | |
|---|---|---|---|
| Pin | Name | Description / Notes | I/O |
| 1 | +REF IN | Differential Reference Input (±10 V Operating Range, ±15 V Maximum Input) | I |
| 2 | SIGNAL GND | Signal Ground | GND |
| 3 | -REF IN | Differential Reference Input (±10 V Operating Range, ±15 V Maximum Input) | I |
| 4 | CURRENT MONITOR | Current Monitor. Analog output signal proportional to the actual current output. Scaling is 13.5 A/V. Measure relative to signal ground. | O |
| 5 | $\overline{\text{INHIBIT IN}}$ | TTL level (+5 V) inhibit/enable input. Leave open to enable drive. Pull to ground to inhibit drive. Inhibit turns off all power devices. | I |
| 6 | +V HALL OUT | Low Power Supply For Hall Sensors (+6 V @ 30 mA). Referenced to signal ground. Short circuit protected. | O |
| 7 | SIGNAL GND | Signal Ground | GND |
| 8 | HALL 1 | Single-ended Hall/Commutation Sensor Inputs (+5 V logic level) | I |
| 9 | HALL 2 | | I |
| 10 | HALL 3 | | I |
| 11 | CURRENT REFERENCE | Measures the command signal to the internal current-loop. This pin has a maximum output of ±7.3 V when the drive outputs maximum peak current. Measure relative to signal ground. | O |
| 12 | FAULT OUT | TTL level (+5 V) output becomes high when power devices are disabled due to at least one of the following conditions: inhibit, invalid Hall state, output short circuit, over voltage, over temperature, power-up reset. | O |
| 13 | RESERVED | Reserved | - |
| 14 | RESERVED | | - |
| 15 | RESERVED | | - |
| 16 | RESERVED | | - |

| P2 and P3 - Power Connector | | | | |
|---|---|---|---|---|
| Pin | | Name | Description / Notes | I/O |
| 1b | 1a | HIGH VOLTAGE | DC Power Input. 3A Continuous Current Rating Per Pin. | I |
| 2b | 2a | HIGH VOLTAGE | | I |
| 3b | | NC | Not Connected (Reserved) | - |
| | 3a | NC (KEY) | Key: No Connection (pin removed) for P2. Not Connected (Reserved) for P3. | - |
| 4b | 4a | PWR GND | Power Ground (Common With Signal Ground). 3A Continuous Current Rating Per Pin. | GND |
| 5b | 5a | PWR GND | | GND |
| 6b | 6a | MOTOR C | Motor Phase C. 3A Continuous Current Rating Per Pin. | O |
| 7b | 7a | MOTOR C | | O |
| 8b | 8a | MOTOR B | Motor Phase B. 3A Continuous Current Rating Per Pin. | O |
| 9b | 9a | MOTOR B | | O |
| 10b | 10a | MOTOR A | Motor Phase A. 3A Continuous Current Rating Per Pin. | O |
| 11b | 11a | MOTOR A | | O |

## HARDWARE SETTINGS

### Jumper Settings

Jumpers are SMT, 0 ohm resistors located on the underside of the drive PCB. By default, the drive is configured with the jumpers installed. Typical drive operation will not require the jumpers to be removed. Please contact the factory before jumper removal.

| Jumper | Description<br>SMT Jumper (0Ω Resistor) | Configuration<br>Not Installed | <br>Installed |
|---|---|---|---|
| JE1 | Inhibit logic. Sets the logic level of inhibit pins. Labeled JE1 on the PCB of the drive. | Low Enable | Low Inhibit |
| JE2 | Hall sensor phasing. Selects 120 or 60 degree commutation phasing. Labeled JE2 on the PCB of the drive. | 60 degree | 120 degree |

## MECHANICAL INFORMATION

| P1 - Signal Connector | | |
|---|---|---|
| Connector Information | | 16-pin, 2.54 mm spaced header |
| Mating Connector | Details | Samtec: BCS-116-L-S-PE |
| | Included with Drive | No |

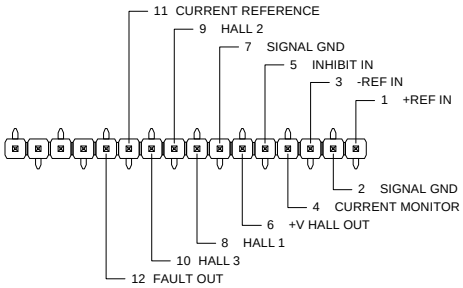


| P2 - Power Connector | | |
|---|---|---|
| Connector Information | | 22-pin, 2.54 mm spaced, dual-row header |
| Mating Connector | Details | Samtec: SSM-111-L-DV |
| | Included with Drive | No |

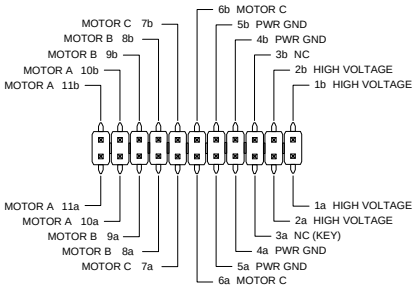


| P3 - Power Connector | | |
|---|---|---|
| Connector Information | | 22-pin, 2.54 mm spaced, dual-row header |
| Mating Connector | Details | Samtec: SSM-111-L-DV |
| | Included with Drive | No |

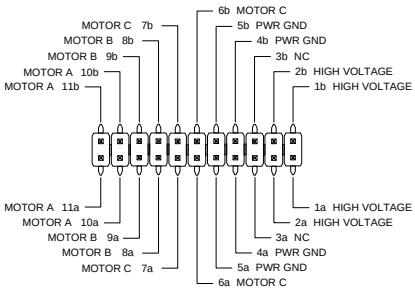

## MOUNTING DIMENSIONS

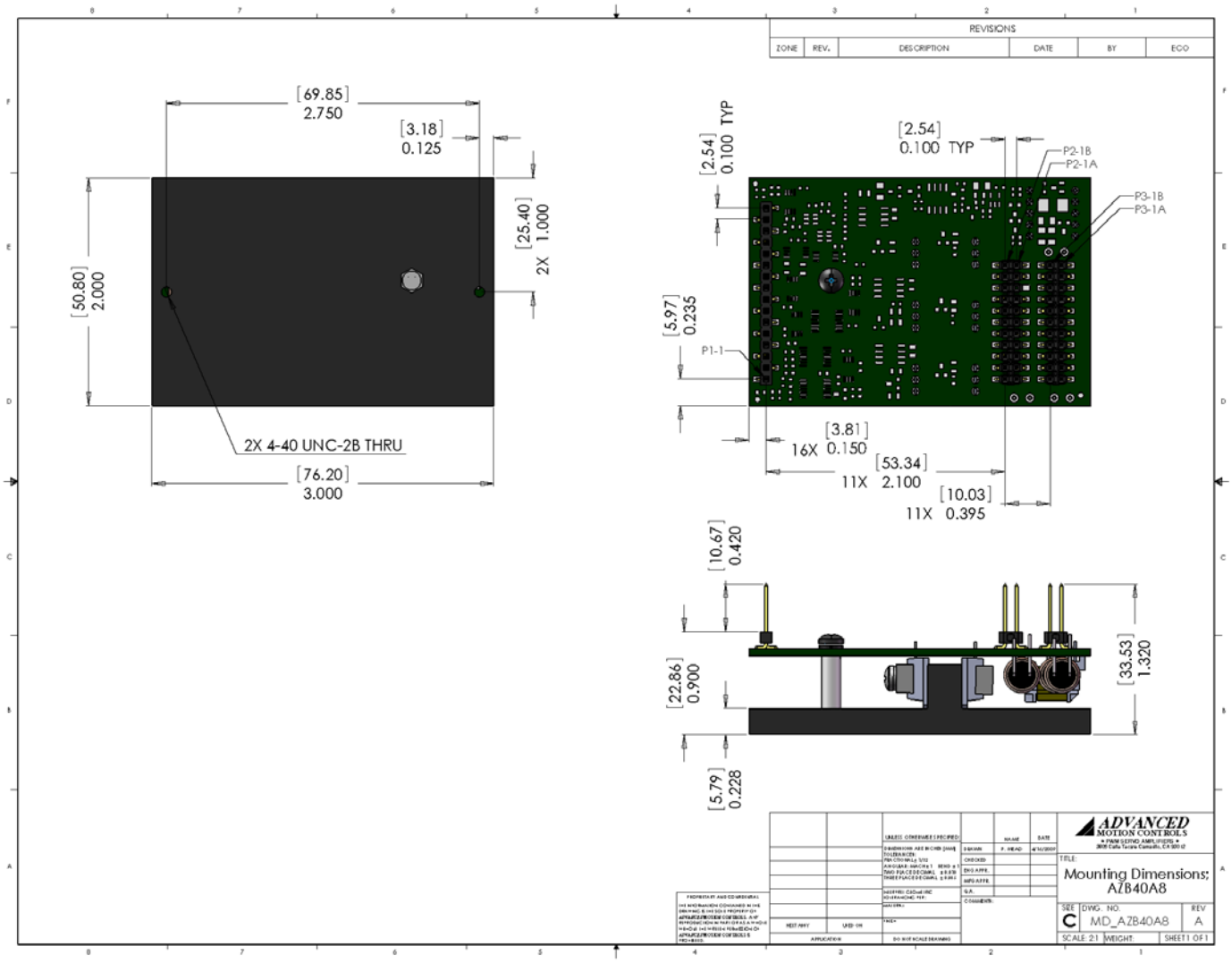

## PART NUMBERING INFORMATION

AZ B 40 **A** 8 -

**AZ Analog Drive Series**

**Drive Type**
Blank: Brushed Drive
B: Brushless drive
BDC: Brushless Drive, PWM Command

**Feedback Supported**
Blank: Current Mode only
E: Encoder Velocity Mode Available
H: Hall velocity Mode Available

**Peak Current (Amps)**

| | |
|---|---|
| 6: 6 Peak, 3 Continuous<br>12: 12 Peak, 6 Continuous<br>25: 25 Peak, 12.5 Continuous<br>40: 40 Peak, 20 Continuous | 80V Models |
| 10: 10 Peak, 6 Continuous<br>25: 25 Peak, 12.5 Continuous | 175V Models |

**Additional Options***
INV: Inverted Inhibit Logic

**Revision**
Assigned a letter (A through Z) by manufacturer

**PWM Command**
DDC: Brushed Drive, PWM Command

**Max DC Bus Voltage (~1:10 in Volts)**
8: 80
20: 175

*Options available for orders with sufficient volume.
Contact *ADVANCED* Motion Controls for more information.

*ADVANCED* Motion Controls AZ series of servo drives are available in many configurations. Note that not all possible part number combinations are offered as standard drives. All models listed in the selection tables of the website are readily available, standard product offerings.

*ADVANCED* Motion Controls also has the capability to promptly develop and deliver specified products for OEMs with volume requests. Our Applications and Engineering Departments will work closely with your design team through all stages of development in order to provide the best servo drive solution for your system. Equipped with on-site manufacturing for quick-turn customs capabilities, *ADVANCED* Motion Controls utilizes our years of engineering and manufacturing expertise to decrease your costs and time-to-market while increasing system quality and reliability.

### Examples of Modifications and Customized Products

- Integration of Drive into Motor Housing
- Mount OEM PCB onto Drive Without Cables
- Multi-axis Configuration for Compact System
- Custom PCB and Baseplate for Optimized Footprint
- RTV/Epoxy Components for High Vibration
- OEM Specified Connectors for Instant Compatibility
- OEM Specified Silkscreen for Custom Appearance
- Increased Thermal Limits for High Temp. Operation
- Integrate OEM Circuitry onto Drive PCB
- Custom Control Loop Tuned to Motor Characteristics
- Custom I/O Interface for System Compatibility
- Preset Switches and Pots to Reduce User Setup
- Optimized Switching Frequency
- Ramped Velocity Command for Smooth Acceleration
- Remove Unused Features to Reduce OEM Cost
- Application Specific Current and Voltage Limits

Feel free to contact Applications Engineering for further information and details.

### Available Accessories

*ADVANCED* Motion Controls offers a variety of accessories designed to facilitate drive integration into a servo system. Visit www.a-m-c.com to see which accessories will assist with your application design and implementation.

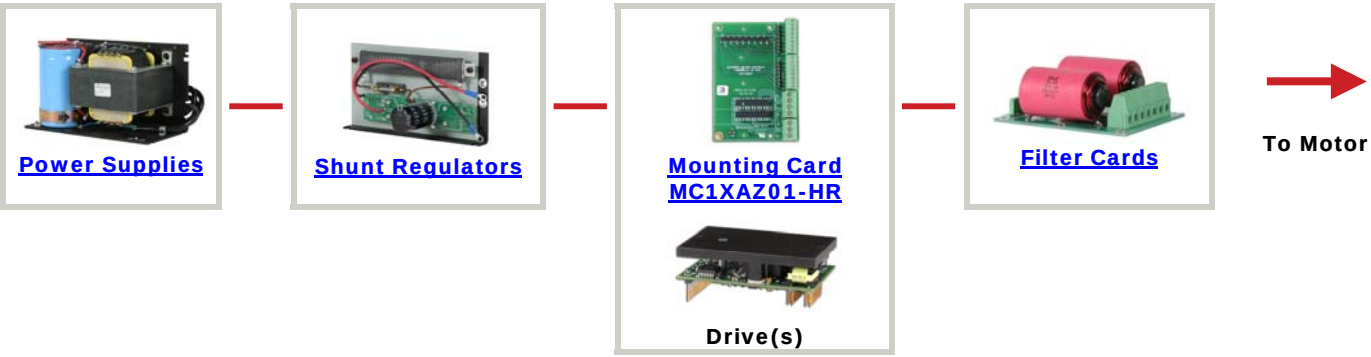


All specifications in this document are subject to change without written notice. Actual product may differ from pictures provided in this document.